NX Series
Main-Standby Transmitter System

All India Radio (AIR)

APPENDIX E

4-PORT SWITCH AND IMPEDANCE MATCHING UNIT

Issue 0.1 ..... 03 April 2013

Nautel Limited
10089 Peggy's Cove Road,
Hackett's Cove, NS, Canada B3Z 3J4
T.877 6 nautel (628835) or +1.902.823.2233
F.+1.902.823.3183 info@nautel.com

U.S. customers please contact:
Nautel Inc.
201 Target Industrial Circle, Bangor ME 04401
T.877 6 nautel (628835) or +1.207.947.8200
F.+1.207.947.3693 info@nautel.com

e-mail: support@nautel.com
www.nautel.com

© Copyright 2013 NAUTEL. All rights reserved.

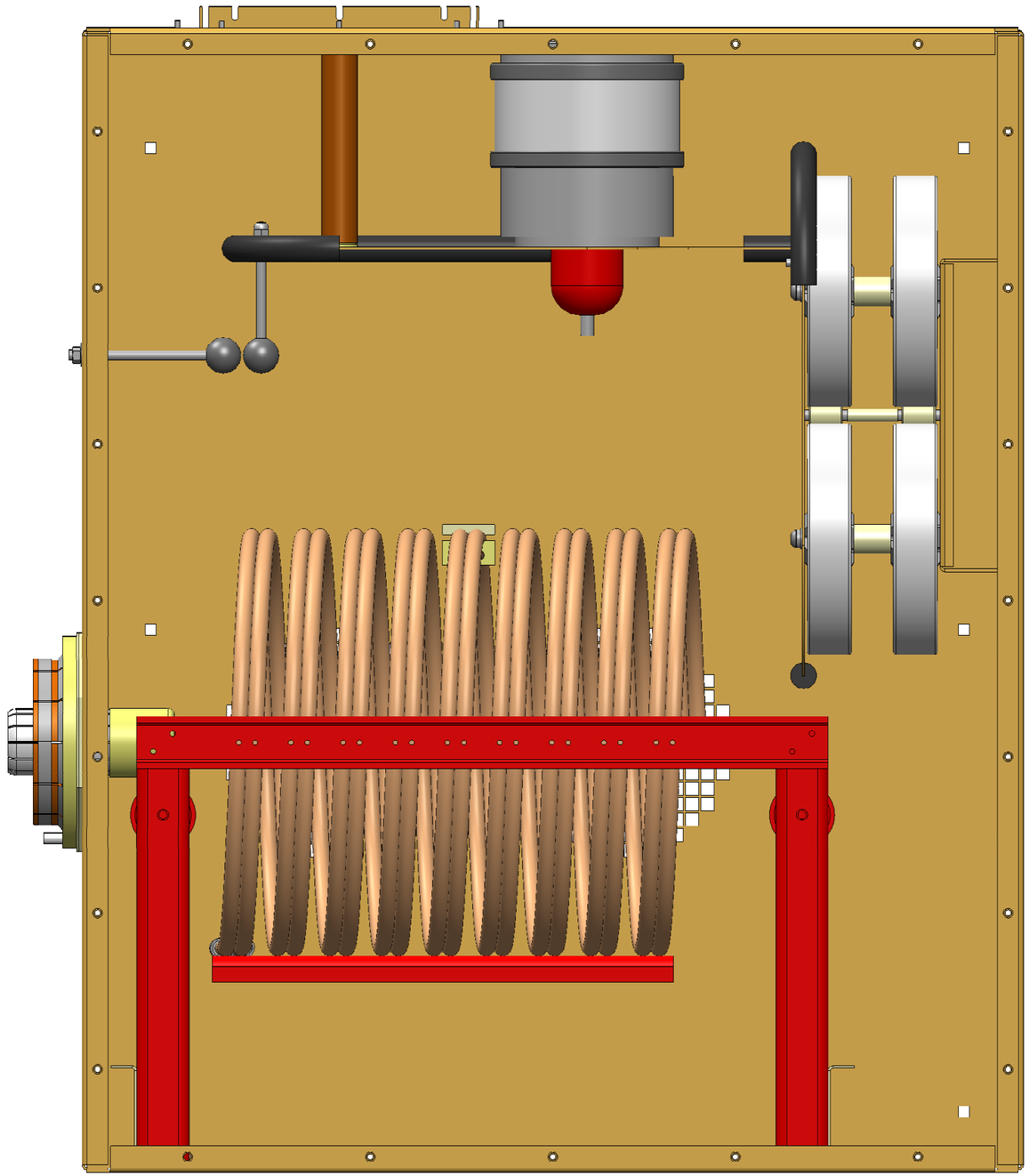

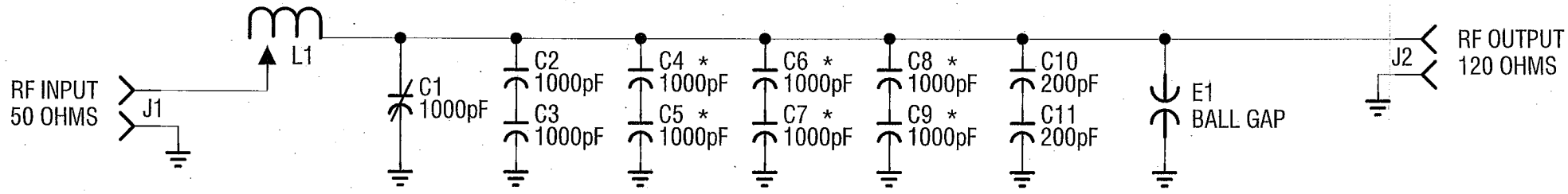

* DENOTES CAPACITORS INSTALLATION DEPENDANT ON FREQUENCY.

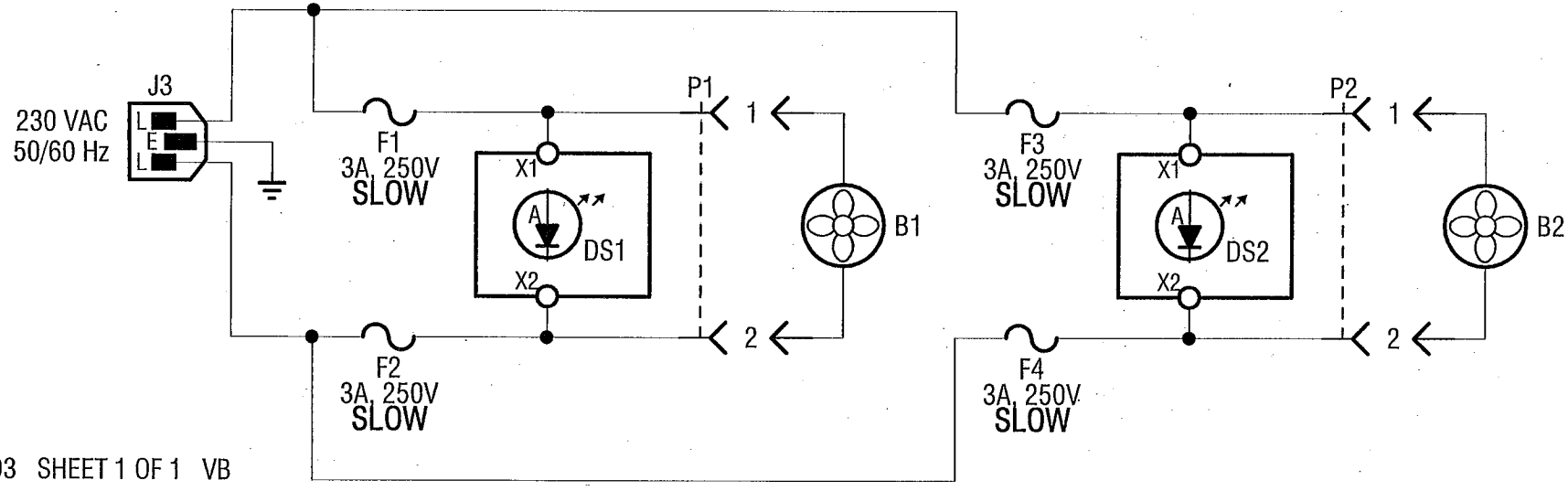

S2280003 SHEET 1 OF 1 VB

					Zout				Var-Cap	Inductor												
phase	100 KW		Freq(khz)	Zin	Rl	Xl	L(µH)	C(nF)	C1(pF)	L(turn)	C2(PF)	C3(PF)	C4(PF)	C5(PF)	C6(PF)	C7(PF)	C8(PF)	C9(PF)	C10(pF)	C11(PF)	n (CS67)/Site	IMU part #
2	1	Mumbai 'B' (Maharastra)	558	50	120	10	16.97	3.01	910	9.10	1000	1000	1000	1000	1000	1000	1000	1000	200	200	8	228-6060
2	2	Mumbai 'A' (Maharastra)	1044	50	120	10	9.07	1.61	510	5.17	1000	1000	1000	1000	0	0	0	0	200	200	4	228-6060-02
3	3	Passi Ghat (A.P)	1062	50	120	10	8.92	1.58	480	5.11	1000	1000	1000	1000	0	0	0	0	200	200	4	228-6060-02
3	4	Varanasi (UP)	1242	50	120	10	7.63	1.35	250	4.58	1000	1000	1000	1000	0	0	0	0	200	200	4	228-6060-02
1	5	Patna (Bihar)	621	50	120	10	15.25	2.7	600	7.97	1000	1000	1000	1000	1000	1000	1000	1000	200	200	8	228-6060
2	6	Pune (Maharestra)	792	50	120	10	11.96	2.12	520	6.34	1000	1000	1000	1000	1000	1000	0	0	200	200	6	228-6060-03
1	7	Vijaywada (AP)	837	50	120	10	11.32	2	900	6.07	1000	1000	1000	1000	0	0	0	0	200	200	4	228-6060-02
3	8	Kolkata'B'	1008	50	120	10	9.4	1.66	560	5.31	1000	1000	1000	1000	0	0	0	0	200	200	4	228-6060-02
1	9	Ranchi (Jharkhand)	549	50	120	10	17.25	3.06	960	9.31	1000	1000	1000	1000	1000	1000	1000	1000	200	200	8	228-6060
1	10	Trichirajalli (TamilNadu)	936	50	120	10	10.12	1.79	690	5.59	1000	1000	1000	1000	0	0	0	0	200	200	4	228-6060-02
2	11	Panaji (Goa)	1287	50	120	10	7.36	1.3	200	4.46	1000	1000	1000	1000	0	0	0	0	200	200	4	228-6060-02
	200 KW																					
1	1	Bangalore (Karnataka)	612	50	120	10	15.48	2.74	640	8.10	1000	1000	1000	1000	1000	1000	1000	1000	200	200	8	228-6050
1	2	Dharwad (Karnataka)	765	50	120	10	12.38	2.19	590	6.52	1000	1000	1000	1000	1000	1000	0	0	200	200	6	228-6050-03
2	3	JabalPur (MP)	801	50	120	10	11.82	2.09	490	6.28	1000	1000	1000	1000	1000	1000	0	0	200	200	6	228-6050-03
1	4	Delhi 'A' (Delhi)	819	50	120	10	11.56	2.05	450	6.17	1000	1000	1000	1000	1000	1000	0	0	200	200	6	228-6050-03
2	5	Ahemdabad (Gujrat)	846	50	120	10	11.2	1.98	880	6.02	1000	1000	1000	1000	0	0	0	0	200	200	4	228-6050-02
2	6	Ajmer (Raj)	603	50	120	10	15.71	2.78	680	8.25	1000	1000	1000	1000	1000	1000	1000	1000	200	200	8	228-6050
1	7	Kolkata'A'(WB)	657	50	120	10	14.42	2.55	450	7.50	1000	1000	1000	1000	1000	1000	1000	1000	200	200	8	228-6050
2	8	Itanagar (Aruna P)	675	50	120	10	14.03	2.49	890	7.29	1000	1000	1000	1000	1000	1000	0	0	200	200	6	228-6050-03
2	9	Silighuri	711	50	120	10	13.32	2.36	760	6.94	1000	1000	1000	1000	1000	1000	0	0	200	200	6	228-6050-03
1	10	Chennai 'A'(TN)	720	50	120	10	13.16	2.33	730	6.87	1000	1000	1000	1000	1000	1000	0	0	200	200	6	228-6050-03
	300 KW			50	120	10																
2	1	Dibrugarh (Assam)	567	50	120	10	16.7	2.96	860	8.91	1000	1000	1000	1000	1000	1000	1000	1000	200	200	8	228-6050
1	2	Jallandhar (Punjab)	873	50	120	10	10.85	1.92	320	5.88	1000	1000	1000	1000	1000	1000	0	0	200	200	6	228-6050-03
1	3	Jammu (J+K)	990	50	120	10	9.57	1.69	590	5.37	1000	1000	1000	1000	0	0	0	0	200	200	4	228-6050-02
1	4	Lucknow (UP)	747	50	120	10	12.68	2.25	650	6.65	1000	1000	1000	1000	1000	1000	0	0	200	200	6	228-6050-03
2	5	Rajkot (Gujrat)	810	50	120	10	11.69	2.07	470	6.22	1000	1000	1000	1000	1000	1000	0	0	200	200	6	228-6050-03
2	6	Suratgarh (Raj)	918	50	120	10	10.32	1.83	730	5.67	1000	1000	1000	1000	0	0	0	0	200	200	4	228-6050-02
																			54		156	
																			TOTAL # of Cap			

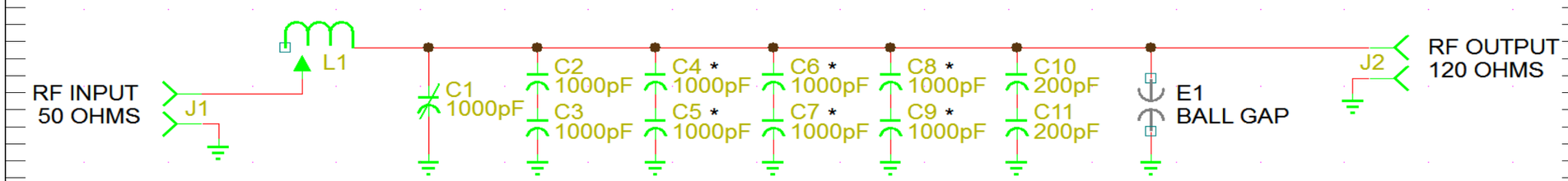

* DENOTES CAPACITORS INSTALLATION DEPENDANT ON FREQUENCY.